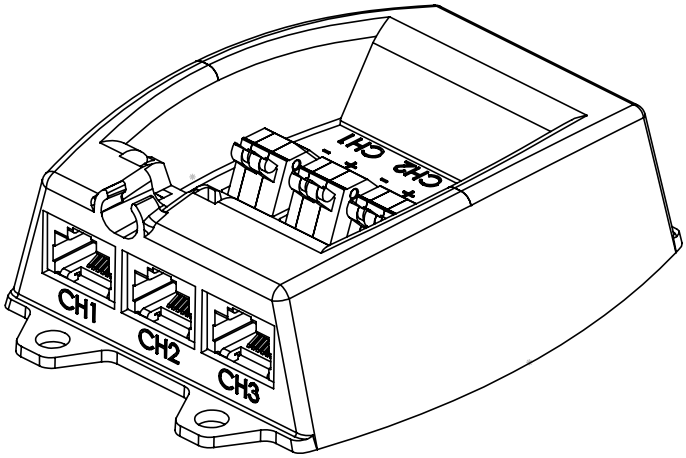

redwoodsystems®

Smart Lights | Smart Buildings

Redwood LED Gateway
Installation Instructions

Model No:
RG-2G-LED

The Redwood LED Gateway controls and dims Redwood Ready third-party LED fixtures. The Gateway is installed on or next to each fixture and communicates with and is powered by the Redwood Engine via low-voltage cable. The Gateway connects to the Redwood Sensor which contains a set of environmental data collectors that detect light level, temperature and motion, transmitting this data back to the Redwood Engine. The Gateway accepts standard category 5e, 6 or 6a cable via RJ45 connectors or 18AWG via spring loaded terminal connectors. The Gateway uses one, two or three “channels” to deliver power from the Redwood Engine to the LED fixture depending on the fixture’s wattage requirements. Each channel provides up to 20 watts.

Specifications

MECHANICAL

- Dimensions: 3" (76.2 mm) W X 1.2" (30.5 mm) H X 4.2" (106.7 mm) D
- Weight: 0.25lbs (0.11kg)
- For indoor use only
- Operating temp: 32°F to 122°F; 0°C to 50°C
- Storage temp: -4°F to 140°F; -20°C to 60°C
- Operating Humidity: 10% to 80% RH non-condensing
- Storage Humidity: 5% to 95% RH non-condensing

ELECTRICAL / DATA

- Input/Output to Redwood Engine: Up to 3 channels via either one RJ45 connector per channel, or two 18 AWG, 2 conductor unshielded cables per channel
- Input/Output to Redwood Sensor: RJ25 connector
- Output to fixture: 10-pin miniature connector
- Transfers up to 60W to fixture (20W per channel nominal)
- Nominal standby power consumption: 500mW

COMPLIANCE

- Class 2 electrical device
- Designed for California Title 24-2008 compliance
- FCC Class A Part 15
- UL2043, UL8750, and UL60950
- UL/CUL listed
- CE Compliant
- RoHS compliant
- Made in the U.S.A.

Preparation

- Determine location for all fixtures, Redwood Dimmers, and Redwood Engines
- Lay low-voltage cable from Redwood Engine location to each fixture location
- Options for connector preparation
  - » If using 18 AWG wiring to connect to the Redwood Engine, strip wire ends to ¼" (6mm)
  - » If using the RJ45 connectors, it can be wired as T568A or T568B which are straight through or crossover arrangements
- Install Redwood Ready light fixtures according to vendor's installation instructions

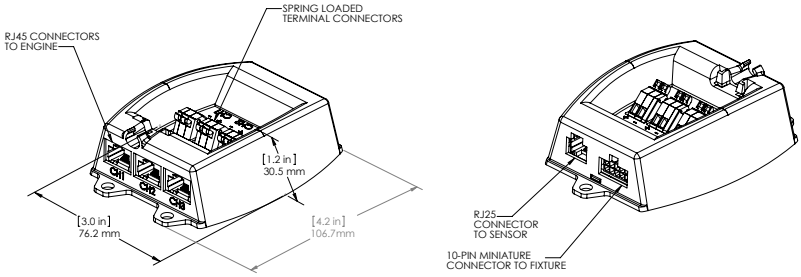

IMPORTANT NOTE

- Do NOT place the Gateway in a location where it will get hotter than 50°C.
- The Redwood Sensors have been tested by UL to UL2043 which ensures low smoke-emitting characteristics and suitable fire resistance for equipment that may be installed in environmental air-handling spaces, as described in Article 300.22(c) of the NEC (2008).
- When the product is installed in air-handling spaces, such as above some suspended ceilings, the cabling employed should be suitable under NEC (2008) Article 800.154 and marked accordingly for use in plenums and air-handling spaces with regard to smoke propagation, such as CMP. The products and wiring should be installed in accordance with all applicable local regulations and practices.
- Check that you used the Redwood supplied RJ25 cable that came with the Sensor for connecting the Sensor to the Gateway.
- Make sure you connect the Sensor cable to the correct connector on the Gateway, otherwise you could damage the Sensor.
- Connect the channels indicated on the Gateway, see diagram below

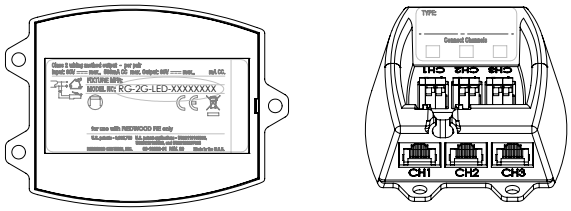

Location of Redwood LED Gateway model number for fixture installation and channel connection

Installation Instructions

For Category Cabling

Step 1: Connect the LED Gateway to the Redwood Engine with RJ45 connector(s) for category cabling to each channel. Proceed to **Step 2** below.

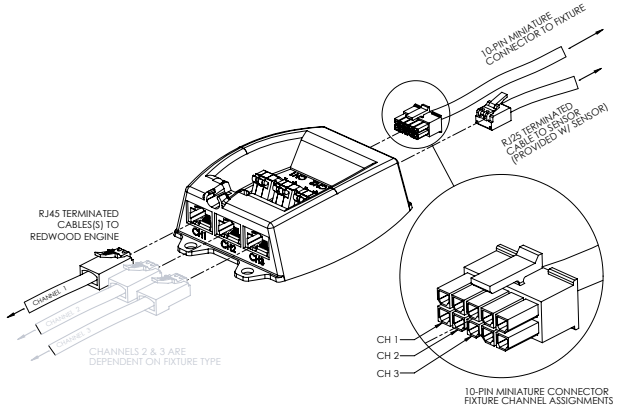

LED Gateway Assembly Diagram—Category Cabling

For 18 AWG Wiring

Step 1: Connect the LED Gateway to the Redwood Engine using the spring loaded terminal connectors to insert low-voltage 18 AWG wiring for each channel. Proceed to **Step 2** below.

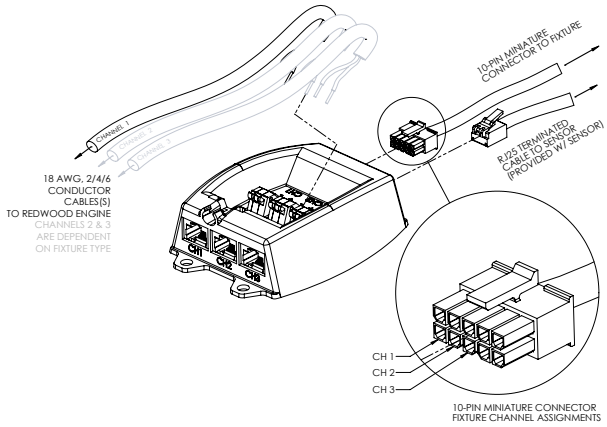

LED Gateway Assembly Diagram—18AWG Cabling

Connect the Gateway to the Fixture and Sensor

Step 2: Connect the fixture to the LED Gateway using the pre-terminated 10-pin miniature connector.
Note: Redwood Ready fixtures often come with connection whips that are 24 inches (60cm). If placing the Gateways more than 12 inches (30cm) from the edge of a fixture, a Redwood cable extender will be required to be used with the installation.

Step 3: Connect the LED Gateway to the Sensor with the Redwood RJ25 cable.

Mount the Gateway

Step 4: The Gateway should be securely mounted to part of the building structure that does not exceed the mechanical specifications for the Gateway. Note that the Gateway must be within 6 feet of the Sensor.

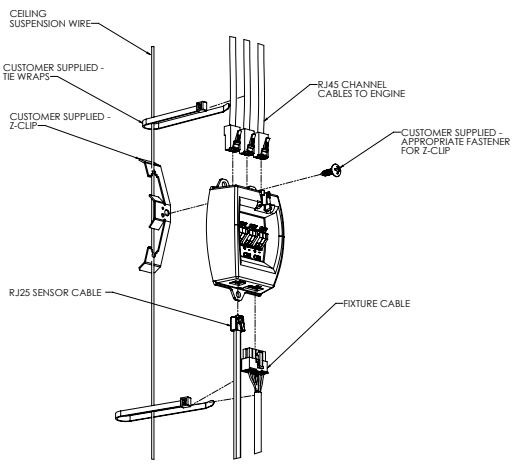

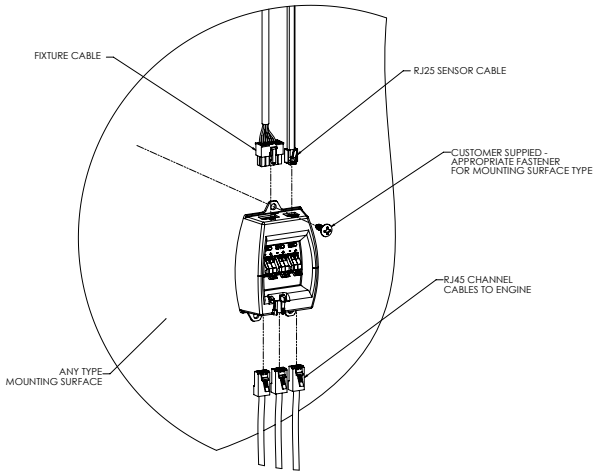

Mounting Options for Redwood LED Gateway — Drop Wire and Surface Mount

For drop wire mounting: recommend using Caddy® multi-function Z-Clip Part # 170650 Description 4Z34. Supports #10-24 and 1/4-20 threaded bridle rings and attaches to #12 wire through ¼" rod.

Ordering Information

Phone Number: (510) 270-5360 (Select Option 2)

SKU Number	Description
RG-2G-LED-XXXXXXXX	Redwood LED Gateway (Contact Redwood representative for SKU unique to each Redwood Ready fixture)
CabExt-2	Fixture-to-Gateway cable extender, 2 ft (60cm)
CabExt-4	Fixture-to-Gateway cable extender, 4 ft (120cm)
CabExt-6	Fixture-to-Gateway cable extender, 6 ft (240cm)
CabExt-8	Fixture-to-Gateway cable extender, 8 ft (480cm)

Contact Information

Redwood Systems
3839 Spinnaker Court
Fremont, CA, 94538
1-800-840-0709 (USA)
1-510-270-5360 (International)
www.redwoodsystems.com
support@redwoodsystems.com

FCC CLASS A REGULATORY STATEMENT—UNITED STATES

Note: This equipment has been tested and found to comply with the limits for a Class A digital device pursuant to Part 15 of the FCC Rules. These limits are designed to provide reasonable protection against harmful interference when the equipment is operated in a commercial environment. This equipment generates, uses, and can radiate radio frequency energy and, if not installed and used in accordance with the instruction manual, may cause harmful interference to radio communications. Operation of this equipment in a residential area is likely to cause harmful interference in which case the user will be required to correct the interference at his own expense.

FCC CLASS A REGULATORY STATEMENT—EUROPE AND AUSTRALIA

This is a Class A product. In a domestic environment this product may cause radio interference in which case the user may be required to take adequate measures.

LIMITED WARRANTY

Redwood warrants during a warranty period of twelve (12) months from delivery that the products as delivered shall be free of material defects and shall conform in all material respects to Redwood's applicable specifications as set forth in this documentation. As Redwood's sole and exclusive obligation and Buyer's sole and exclusive remedy for material breach of the foregoing warranty, Redwood shall, at its option and in accordance with its standard RMA procedures, refund the purchase price, or repair or replace the nonconforming products, provided proof of purchase and written notice of non-conformance are received by Redwood within the warranty period. This warranty shall not apply to products that Redwood determines have been subjected to testing for other than specified electrical characteristics or to operating and/or environmental conditions in excess of the maximum values established by Redwood, or have been the subject of mishandling, misuse, neglect, improper repair, alteration, damage, assembly, or processing that alters physical or electrical properties, or have been damaged in transit. This warranty excludes all costs of shipping, customs clearance and related charges outside the contiguous 48 United States and Canada. In the event no defect or breach of warranty is discovered by Redwood upon receipt of returned products, the products will be returned at Buyer's expense. Any repair or replacement provided to Buyer will not extend the warranty period for the products in question. Excluded from the foregoing warranty are parts defined by Redwood as "consumable."

DISCLAIMER OF WARRANTY. THIS WARRANTY EXTENDS TO BUYER ONLY AND NOT TO BUYER'S CUSTOMERS OR USERS OF BUYER'S PRODUCTS AND IS IN LIEU OF, AND REDWOOD EXPRESSLY DISCLAIMS, ALL OTHER WARRANTIES, WHETHER EXPRESS, IMPLIED OR STATUTORY, INCLUDING, BUT NOT LIMITED TO, ANY WARRANTIES OF MERCHANTABILITY, FITNESS FOR A PARTICULAR PURPOSE, TITLE AND NON-INFRINGEMENT. This warranty shall not be enlarged, and no obligation or liability shall arise out of Redwood's rendering of technical advice, facilities or services in connection with the delivery of the products. This warranty gives you specific legal rights, and you may also have other rights which vary from state to state. Some states do not allow limitations on how long an implied warranty lasts, so the above limitation may not apply to you.

© 2012. Redwood Systems, Inc. All rights reserved.
All other trademarks are the property of their respective owners.